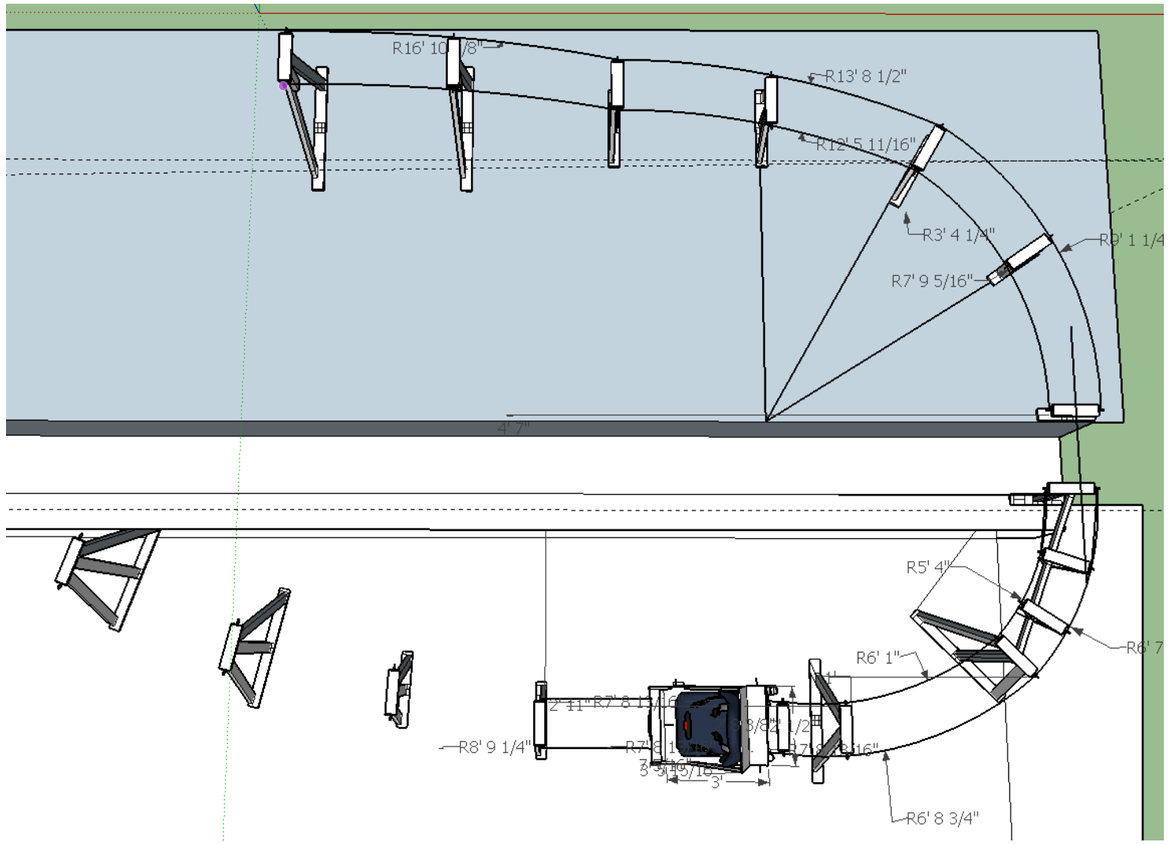
R13' 8 1/2"
R12' 5 11/16"
R3' 4 1/4"
R7' 9 5/16"
4' 7"
R5' 4"
R6' 1"
R8' 9 1/4"
3'
R6' 8 3/4"

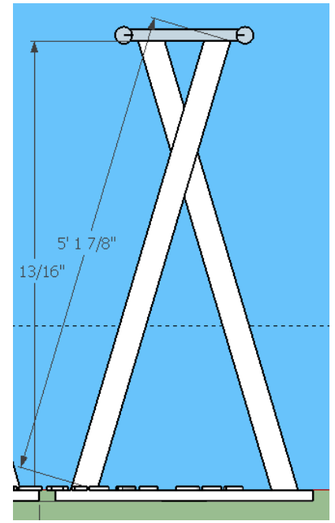
5' 1 7/8"
13/16"

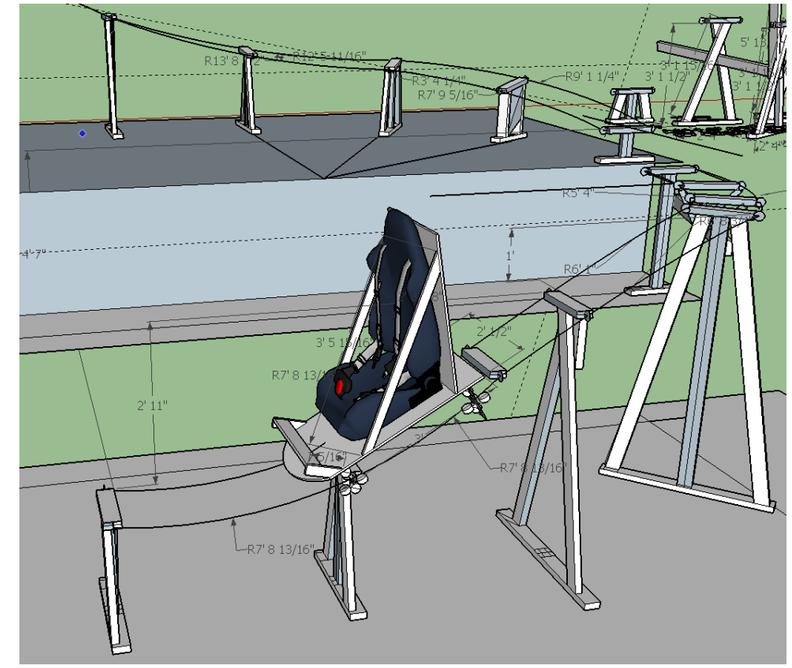
R9' 1 1/4"
R7' 9 5/16"
R5' 4"
1'
2' 11"
R7' 8 13/16"

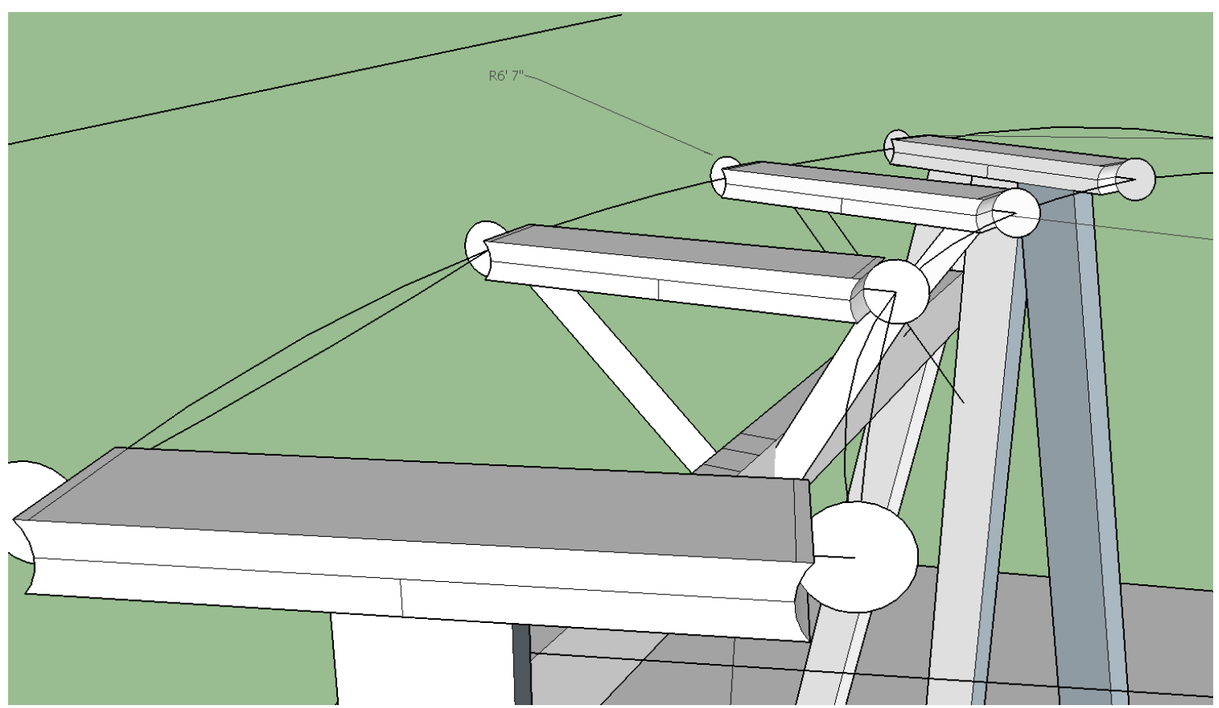
R6' 7"

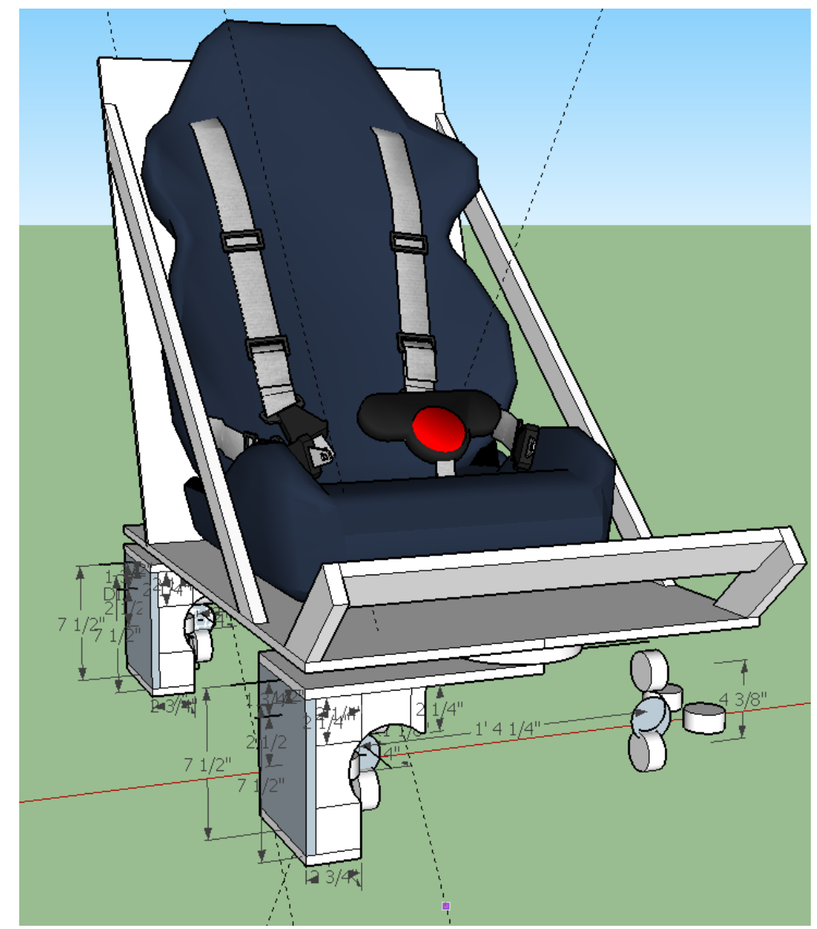
7 1/2"
2 1/4"
1' 4 1/4"
4 3/8"
3/4"

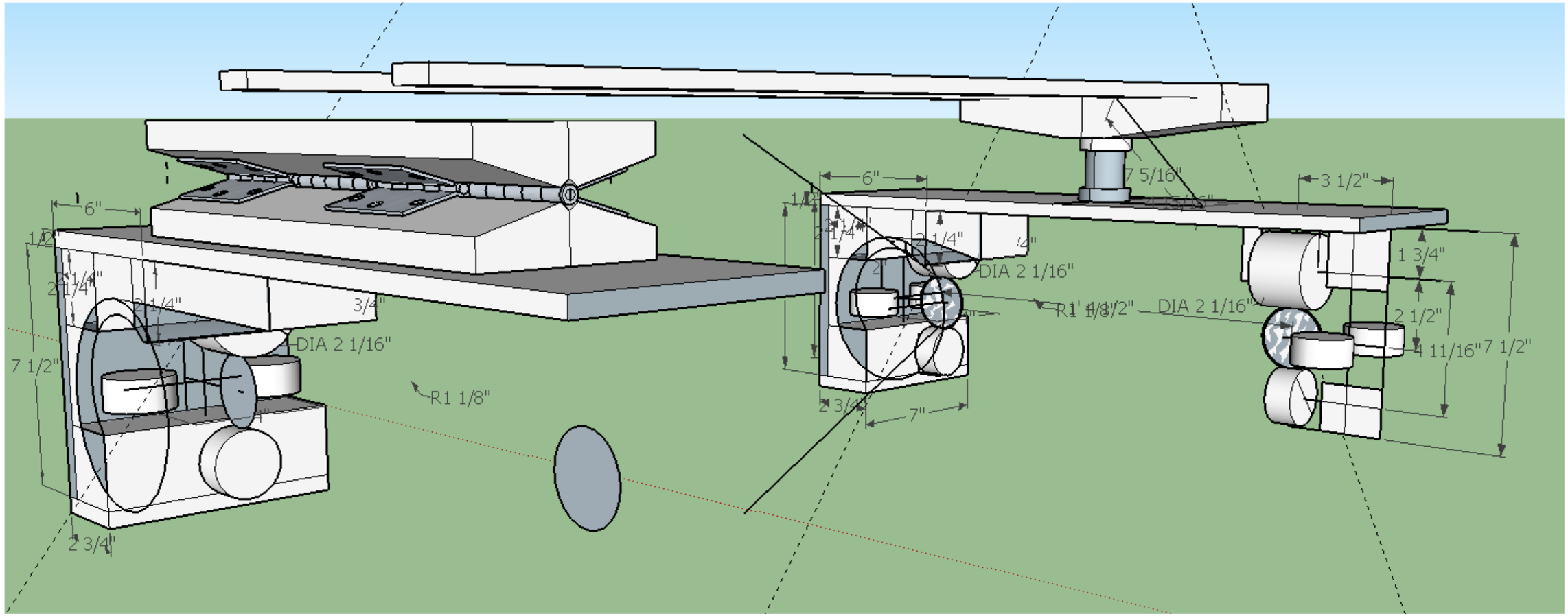
6"
1/2"
2 1/4"
2 1/4"
3/4"
DIA 2 1/16"
7 1/2"
R1 1/8"
2 3/4"
6"
7 5/16"
3 1/2"
1 3/4"
2 1/2"
4 11/16"
7 1/2"
DIA 2 1/16"
R1 1/8"
2 3/4"
7"

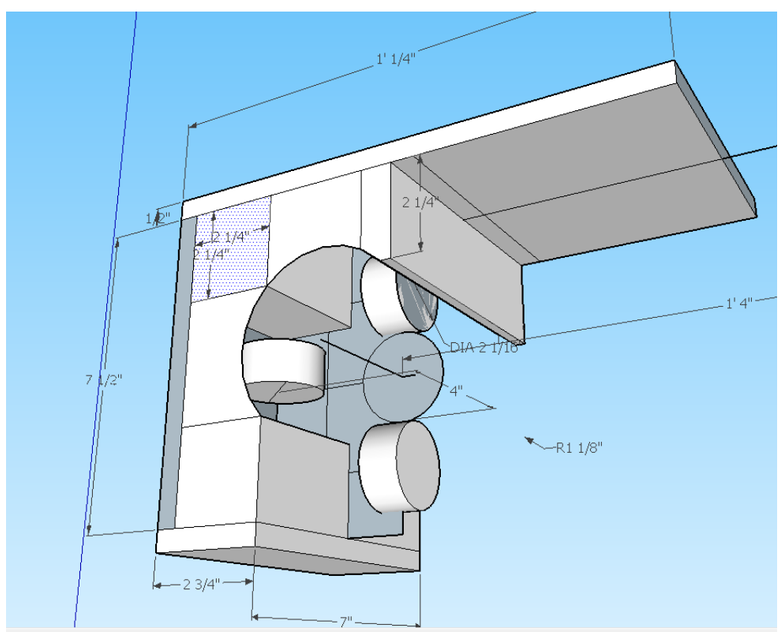
1' 1/4"
2 1/4"
1' 4"
DIA 2 1/16"
4"
7 1/2"
R1 1/8"
2 3/4"
7"

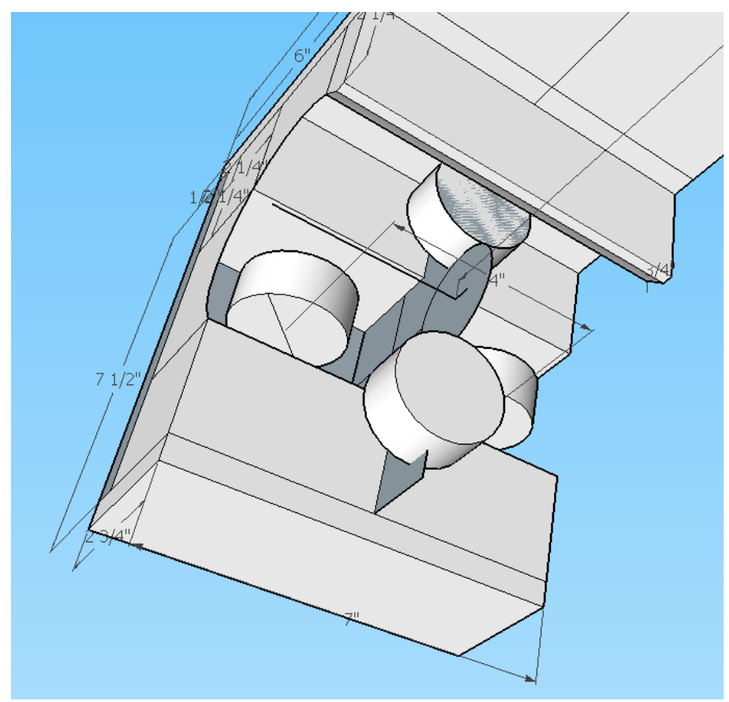
6"
7 1/2"
4"
2 3/4"
7"

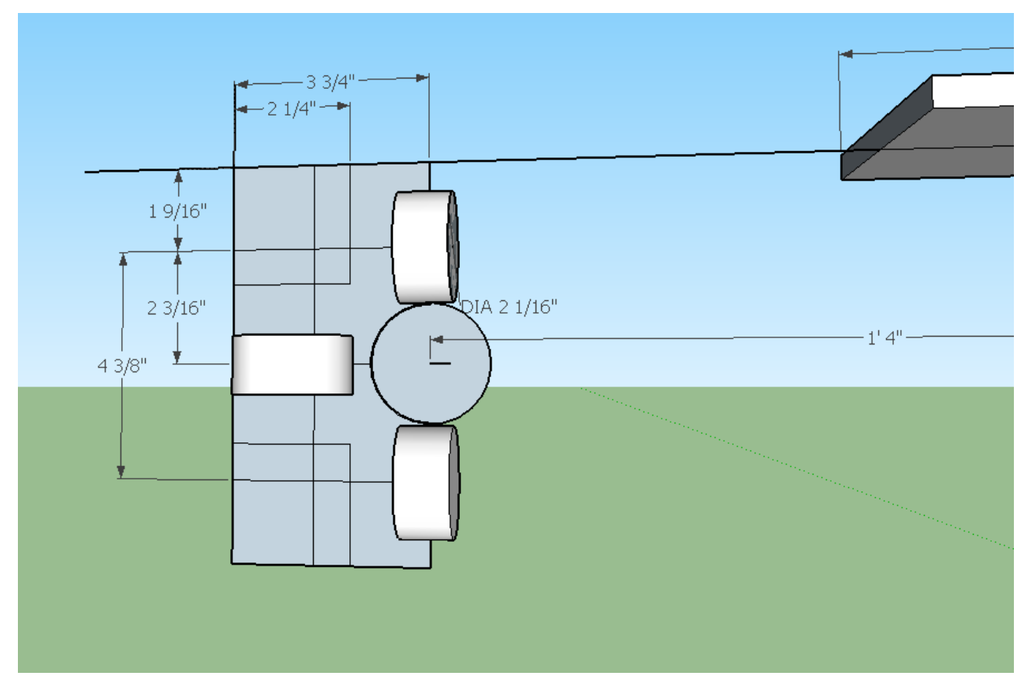
3 3/4"
2 1/4"
1 9/16"
2 3/16"
4 3/8"
DIA 2 1/16"
1' 4"